Wiring Diagram:Reader D-1-W with Populus V9

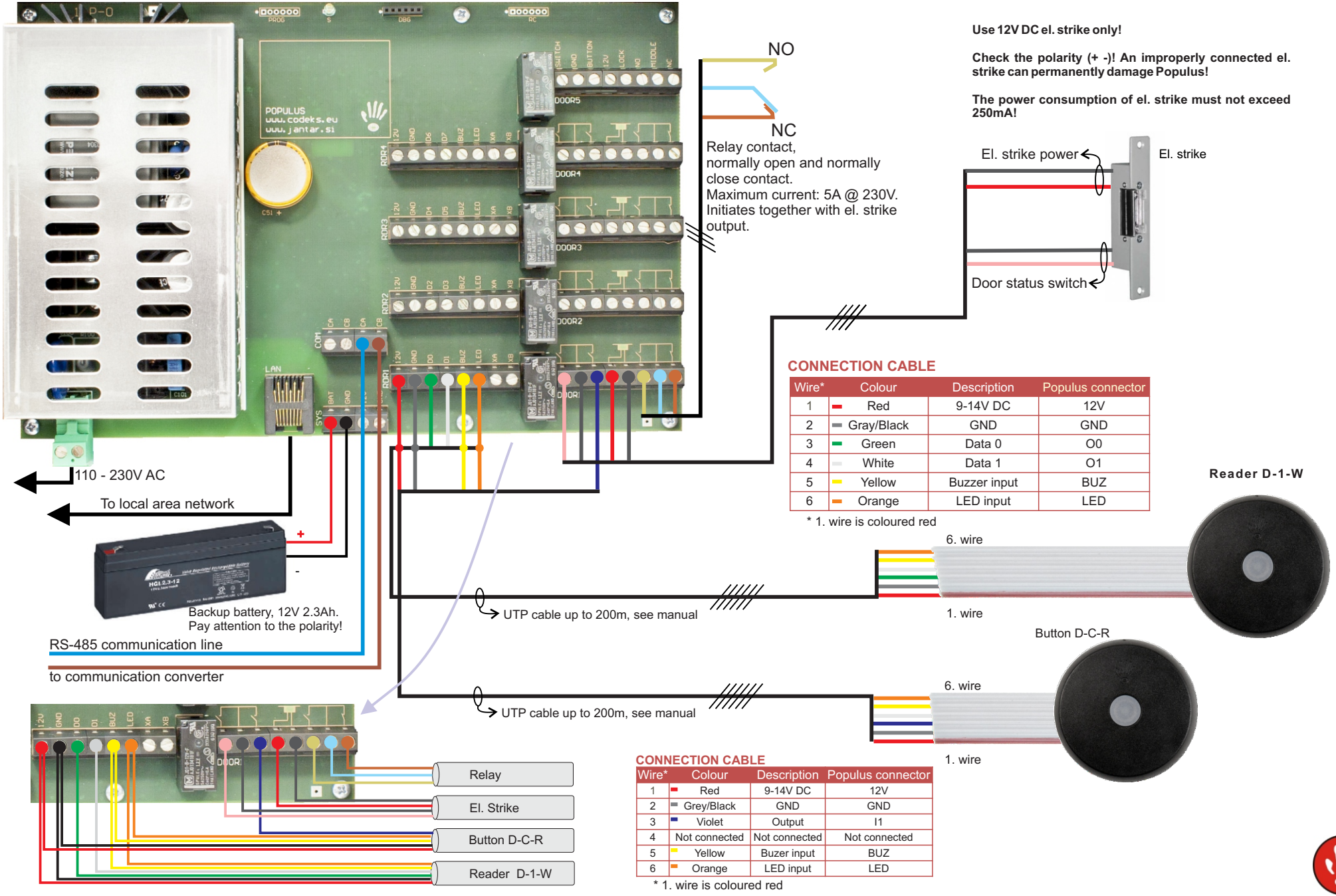

CONNECTION CABLE

Wire*	Colour	Description	Populus connector
1	Red	9-14V DC	12V
2	Gray/Black	GND	GND
3	Green	Data 0	O0
4	White	Data 1	O1
5	Yellow	Buzzer input	BUZ
6	Orange	LED input	LED

* 1. wire is coloured red

CONNECTION CABLE

Wire*	Colour	Description	Populus connector
1	Red	9-14V DC	12V
2	Grey/Black	GND	GND
3	Violet	Output	I1
4	Not connected	Not connected	Not connected
5	Yellow	Buzer input	BUZ
6	Orange	LED input	LED

* 1. wire is coloured red

www.jantar.si